Layout installation for EasyPact or Compact NS branch extensions

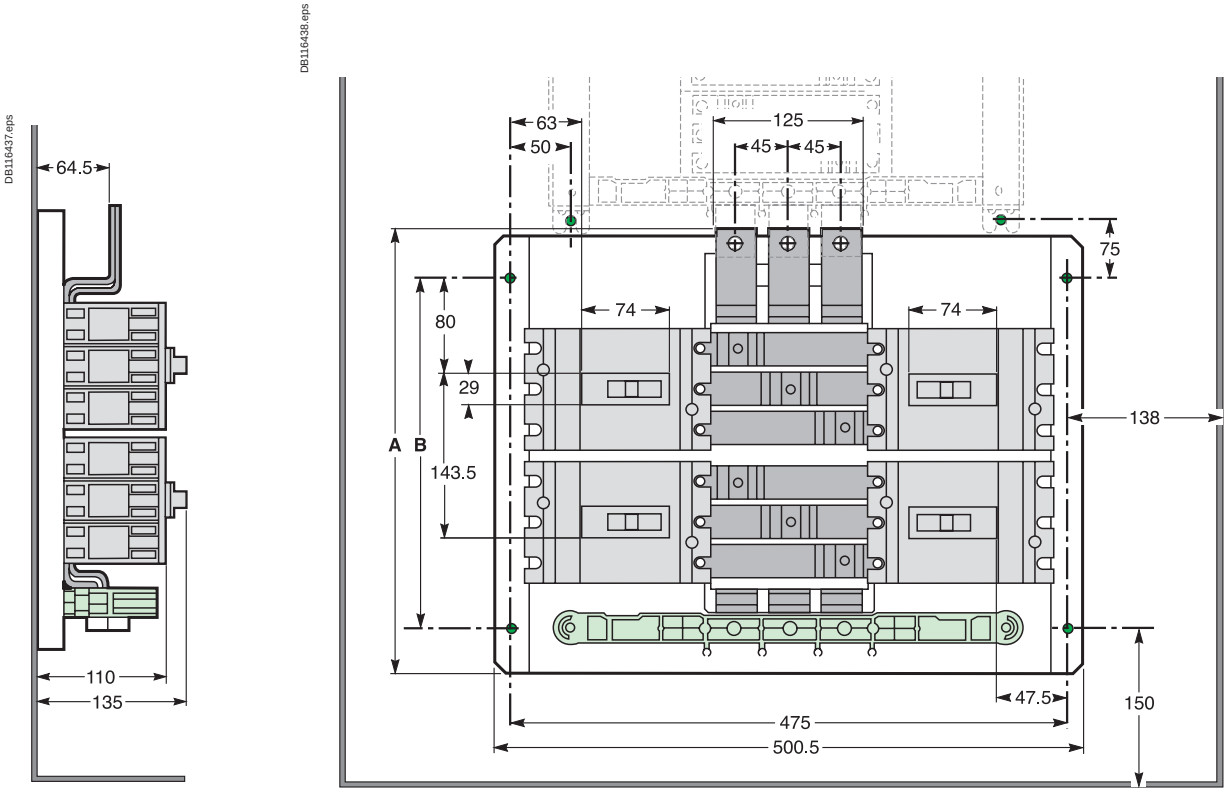

EZBNS2 and EZBNS4 Compact NS branch breaker extension.

	A	B	C	D	E	F	G	H
EZBNS2	270	175	NA	-	-	-	-	-
EZBNS4	384	275	85.5	-	-	-	-	-
EZC250	-	-	90.5	57.5	24	61	52	249
NS250	-	-	85.5	78.5	29	45.5	76	232

Trim cut-out

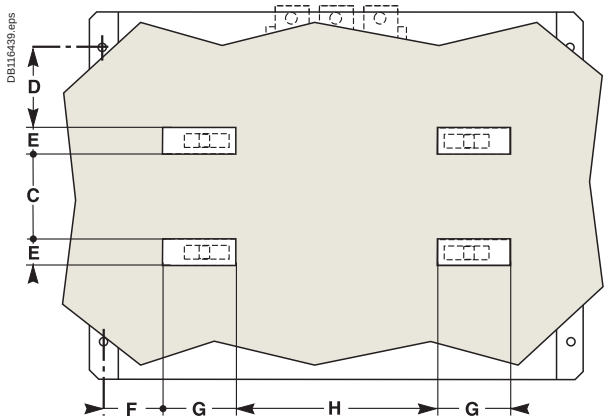

Installation guide

Presentation *II*
Functions and characteristics *A-1*
Busbars *B-1*

Dimensions
EasyPact 100 C-2
EasyPact 100 A with plug-in C-4
EasyPact 250 - EZC250/EZCV250 C-6
EasyPact 250 A with plug-in C-8
EasyPact 400 C-10
EasyPact 100 accessories C-12
EasyPact 250 accessories C-13
EasyPact 400 accessories C-14

Safety clearances and minimum distances **C-15**

Temperature derating **C-17**

Tripping curves **C-18**

Current-limiting curves **C-20**

Cascading **C-21**

Cascading tables **C-22**

Motor protection **C-24**

Capacitor protection **C-26**

Catalogue numbers *D-1*

Dimensions
EasyPact 100

Dimensions

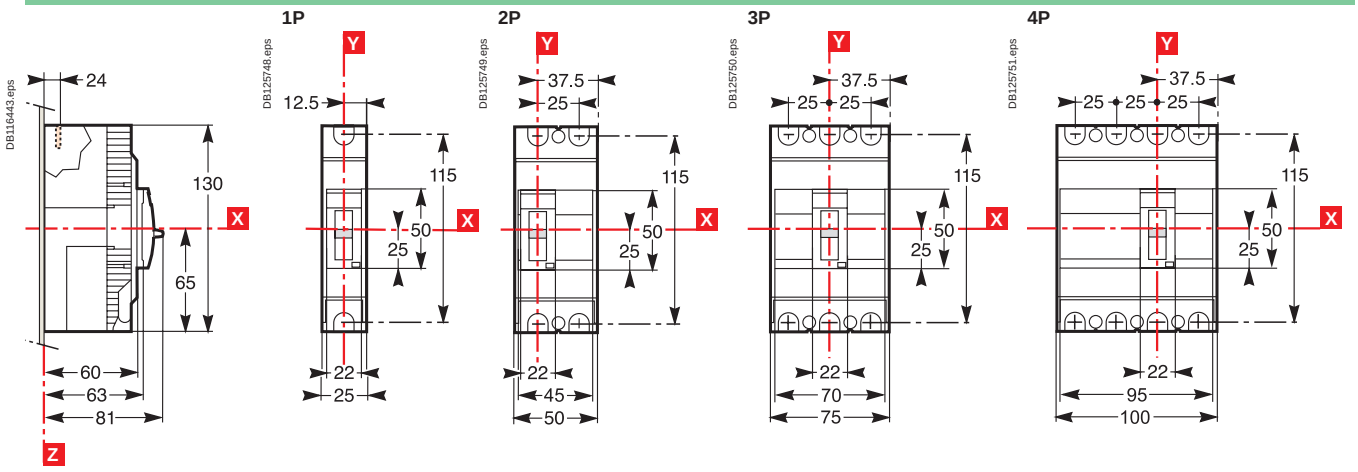

Mounting on plate

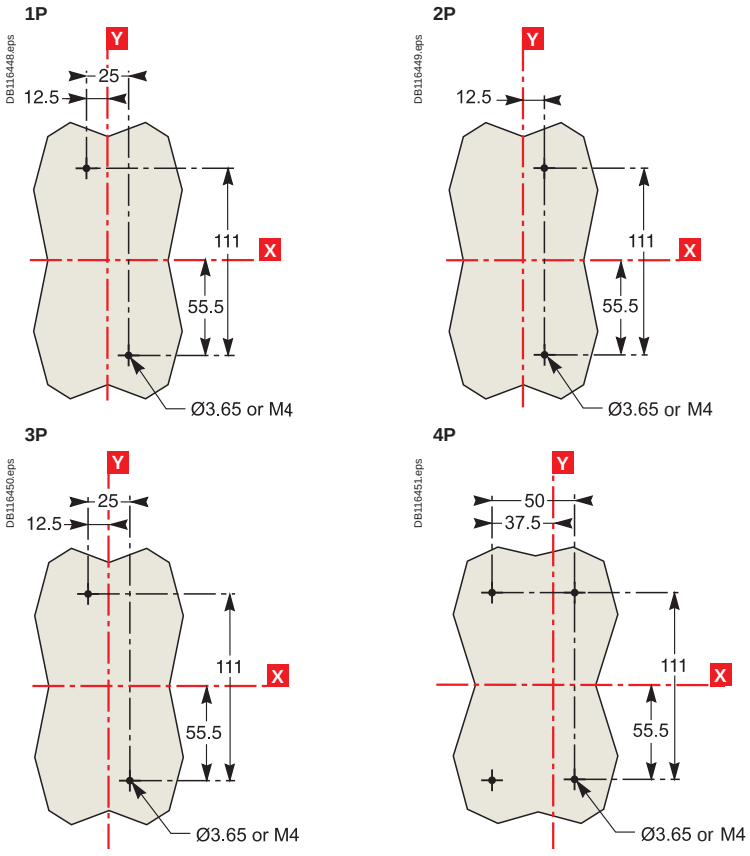

Mounting on DIN rail

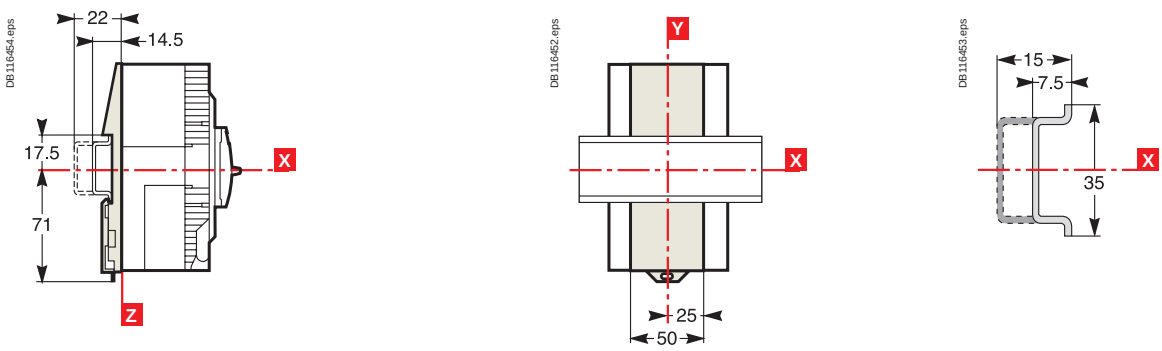

Door cut-out (small)

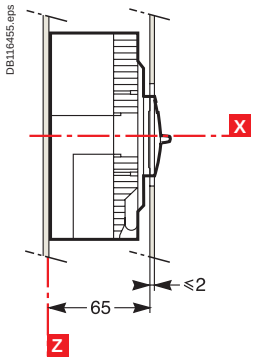

1P, 3P

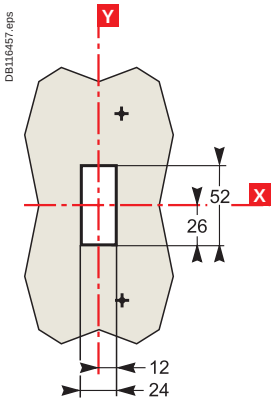

2P

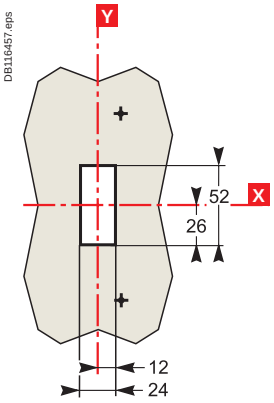

4P

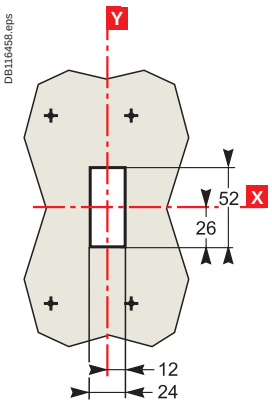

Door cut-out (large)

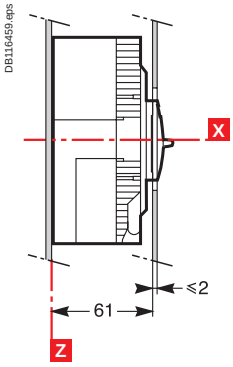

1P

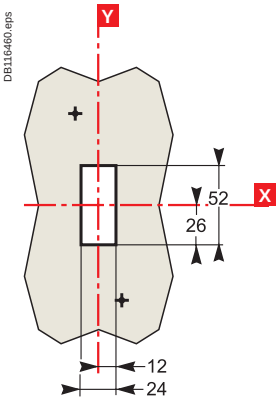

2P

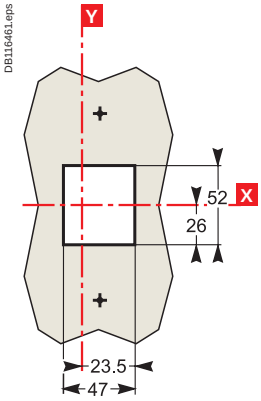

3P

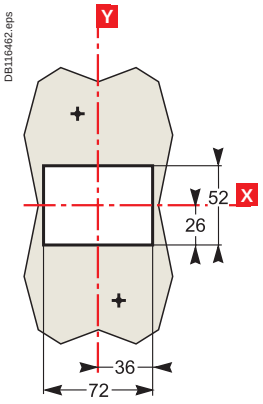

4P

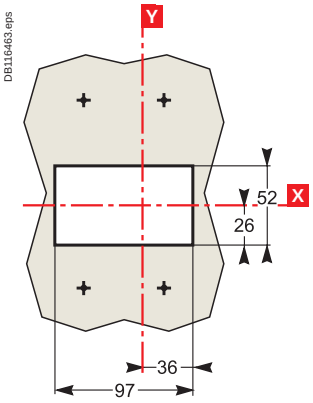

Dimensions
EasyPact 100 A with plug-in

Dimensions

DB127536.eps

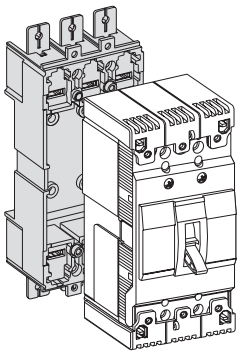

DB127538.eps

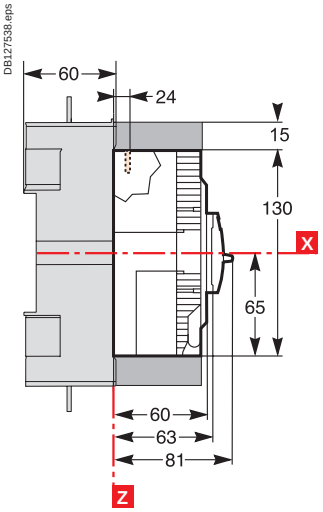

DB127539.eps

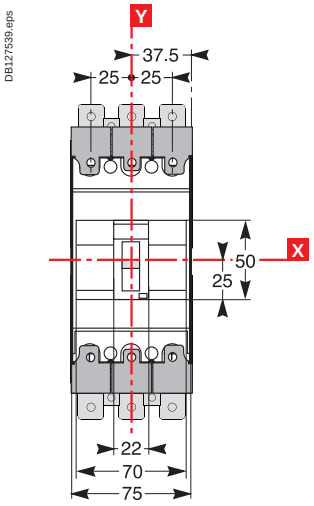

Mounting

Through front panel

DB127541.eps

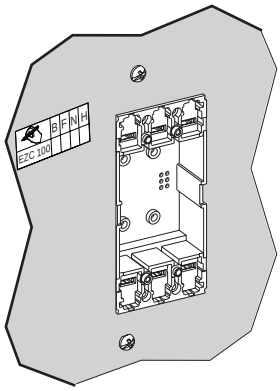

DB127537.eps

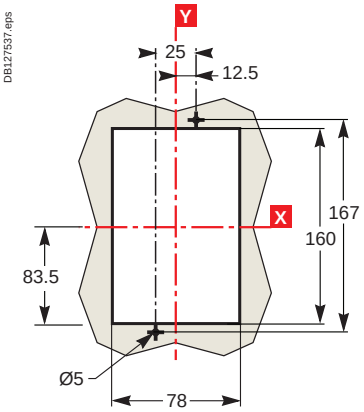

On rail

DB127542.eps

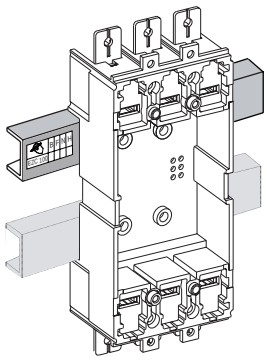

DB127540.eps

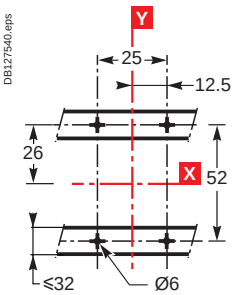

On backplate

DB127543.eps

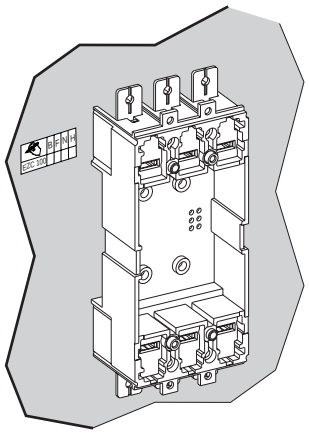

DB127544.eps

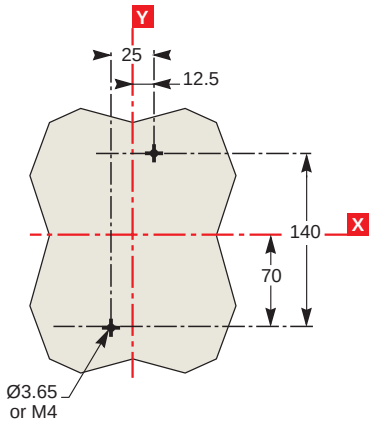

Dimensions - combination

DB127545.eps

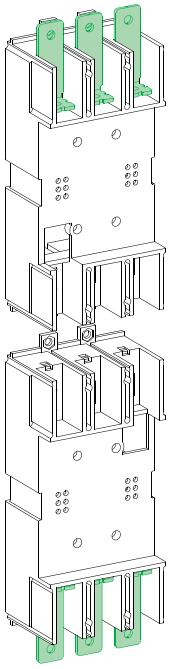

DB127546.eps

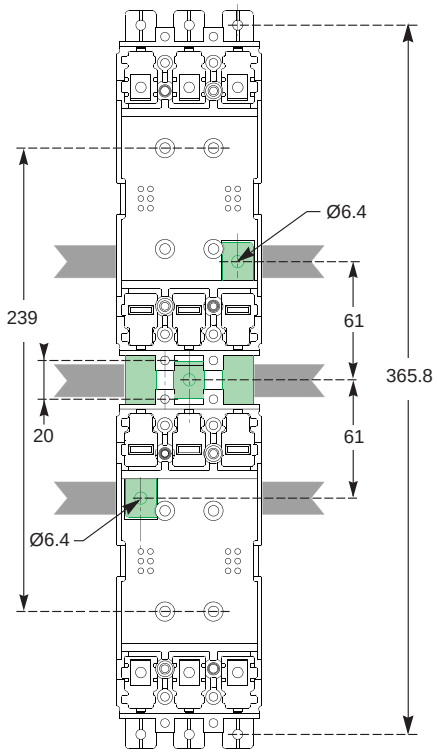

Dimensions
EasyPact 250
EZC250/EZCV250

Dimensions (EZC250)

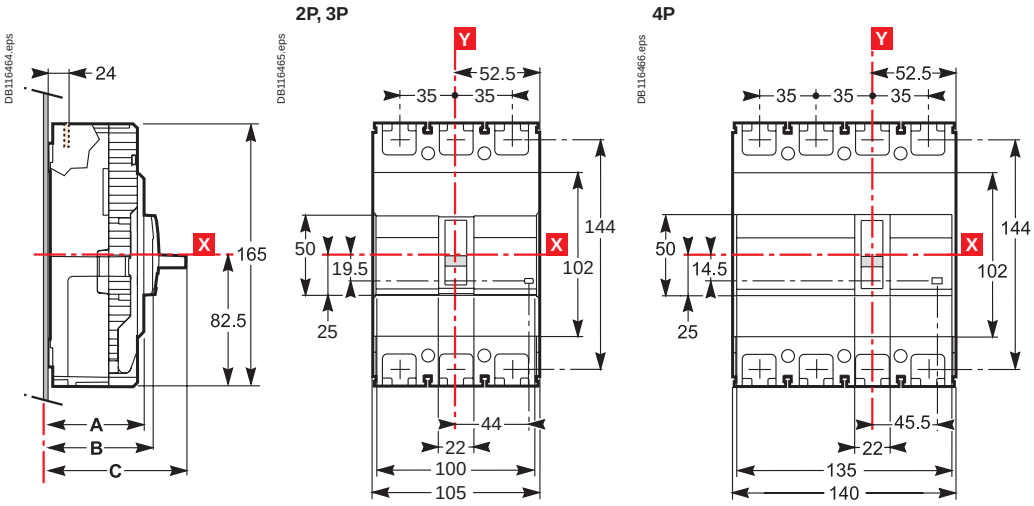

Dimensions (EZCV250)

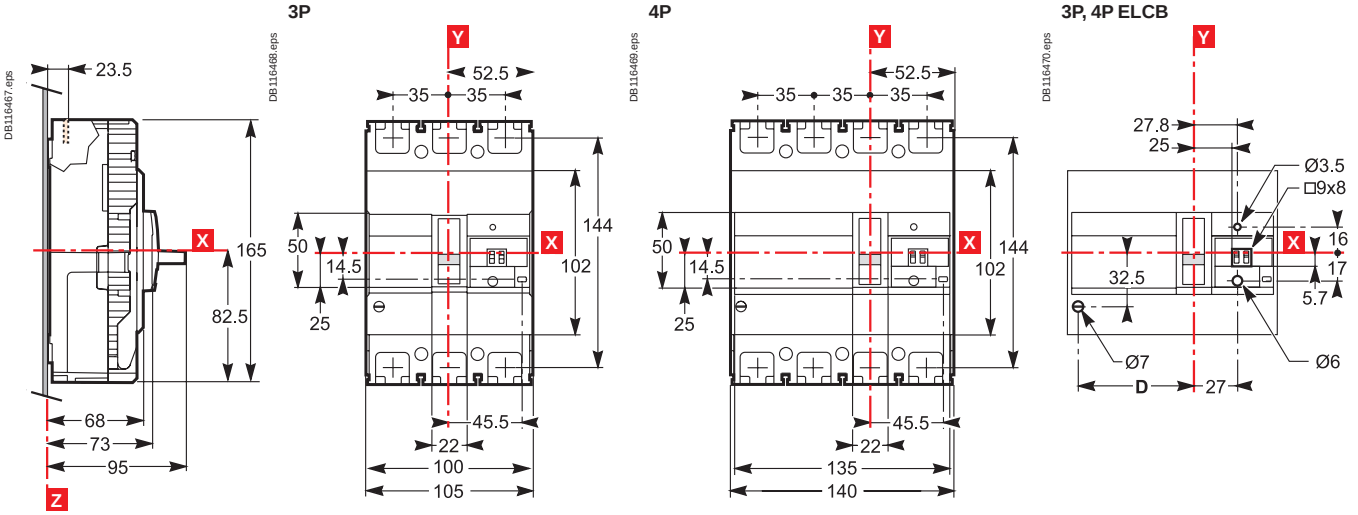

Mounting on plate

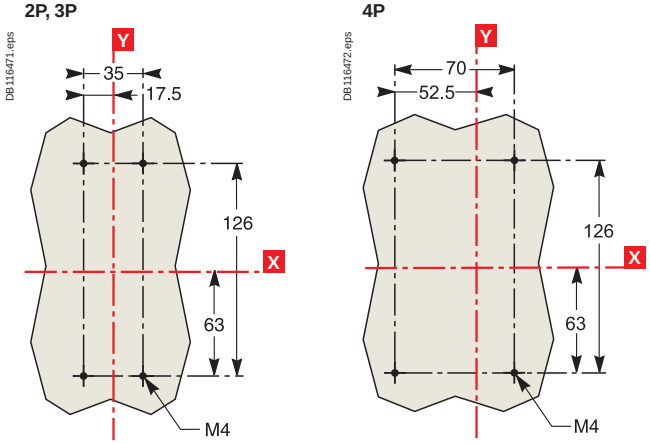

Door cut-out (small)

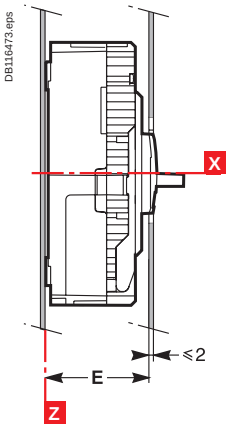

2P, 3P

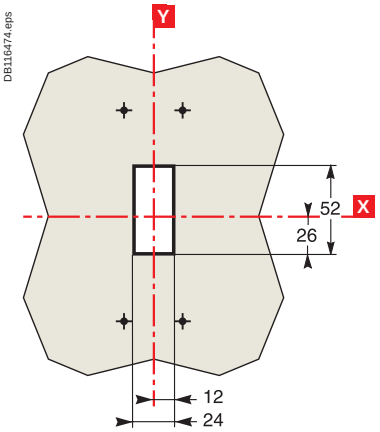

4P

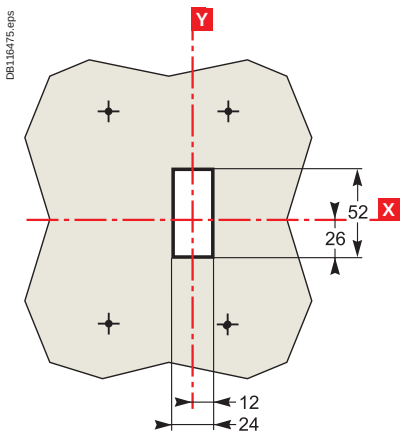

Door cut-out (large)

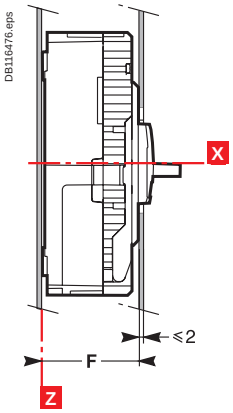

2P, 3P

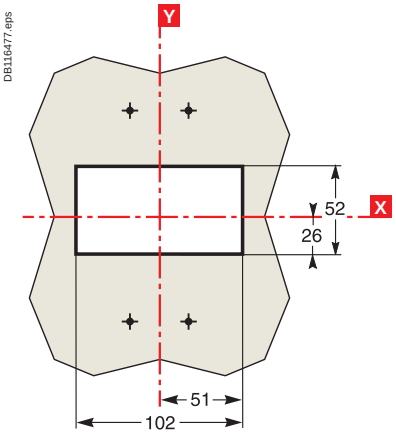

4P

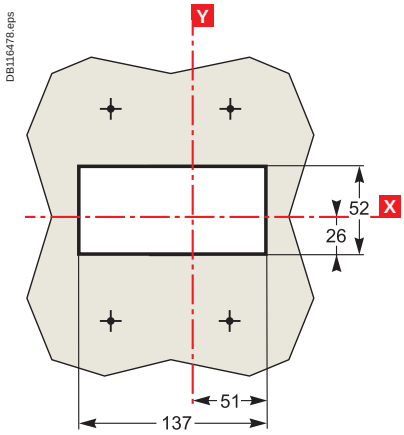

Dimensions (mm)

	A	B	C	D	E	F
EZC 2/3P	60	65	85.5	-	67	61
EZC 4P	68	73	95	-	75	69
EZCV 3P				45.5		
EZCV 4P				80.5		

Dimensions
EasyPact 250 A with plug-in

Dimensions

DB127550.eps

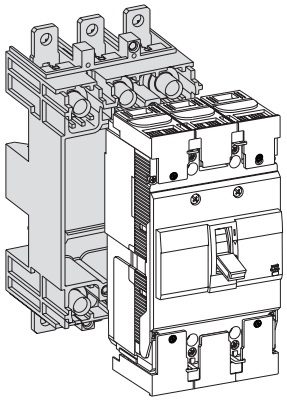

DB127586.eps

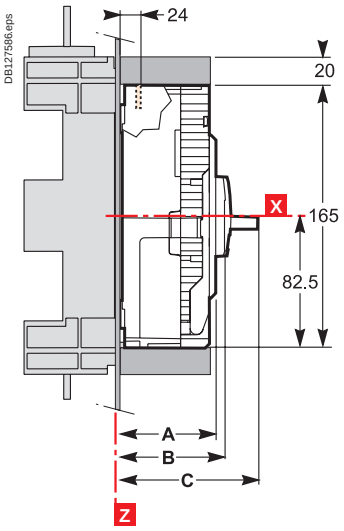

DB127587.eps

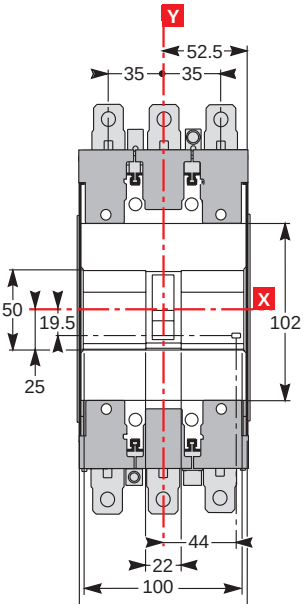

Mounting

Through front panel

DB127554.eps

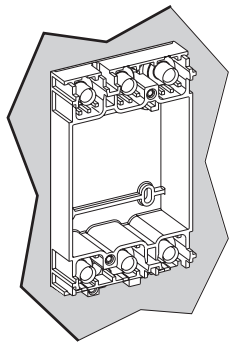

3P

DB127556.eps

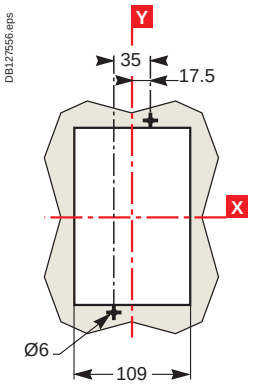

4P

DB127557.eps

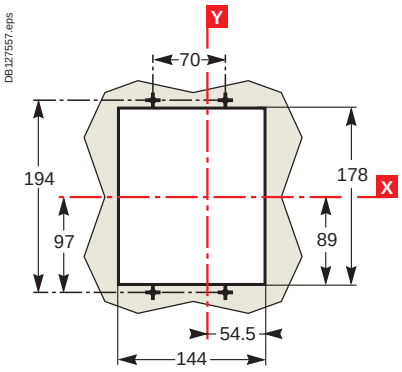

On rail

DB127555.eps

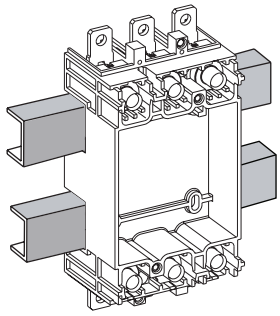

3P

DB127558.eps

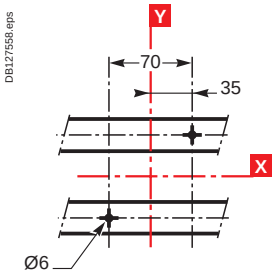

4P

DB127559.eps

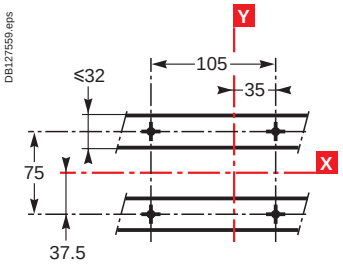

On backplate

DB127560.eps

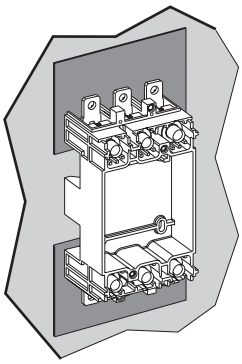

DB127581.eps

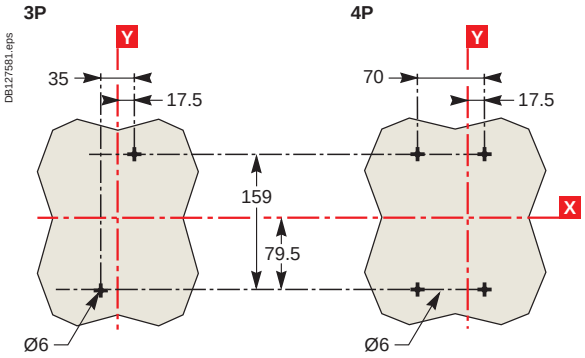

Dimensions
EasyPact 400

Dimensions

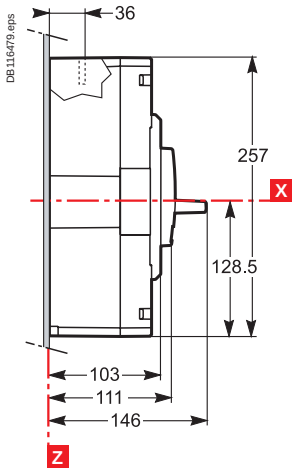

3P

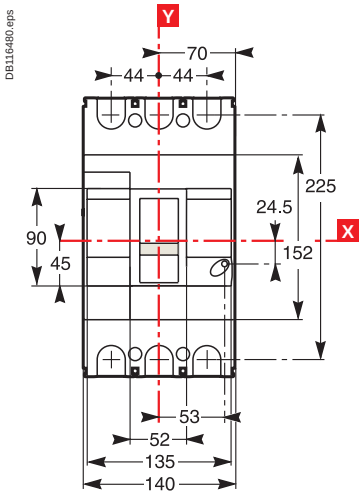

4P

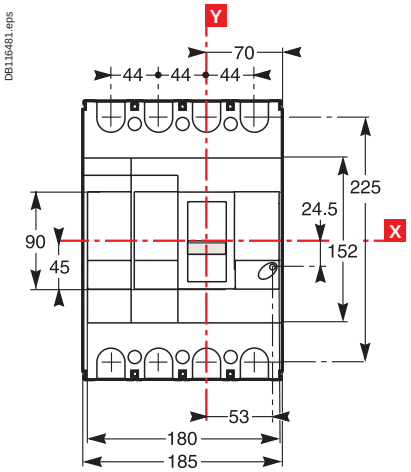

Mounting on plate

3P

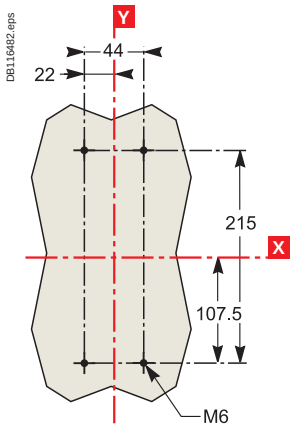

4P

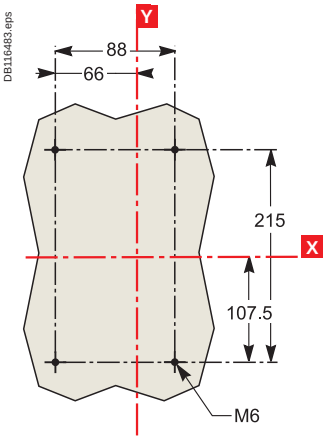

Door cut-out (small)

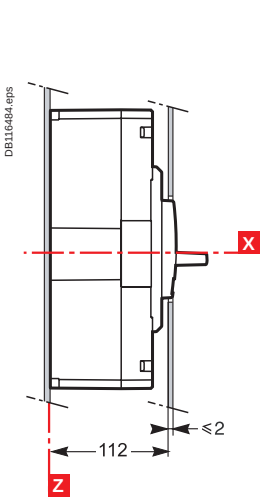

3P

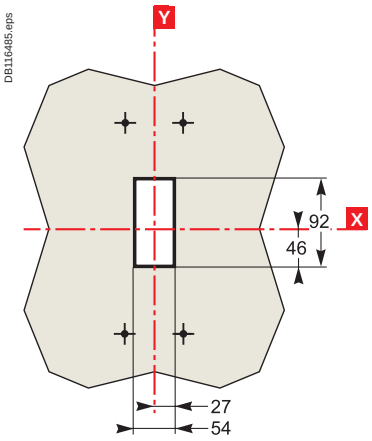

4P

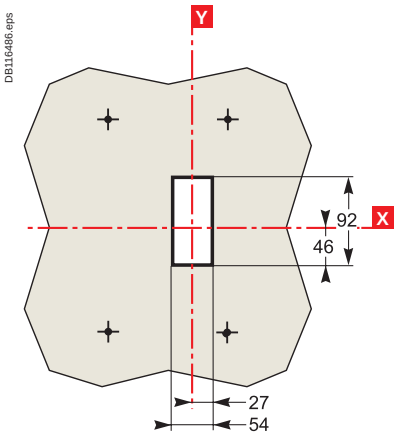

Door cut-out (large)

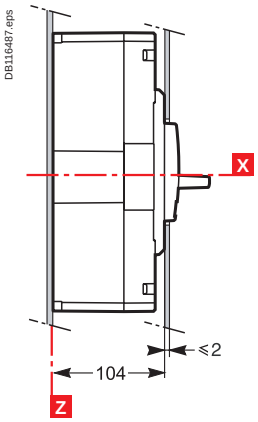

3P

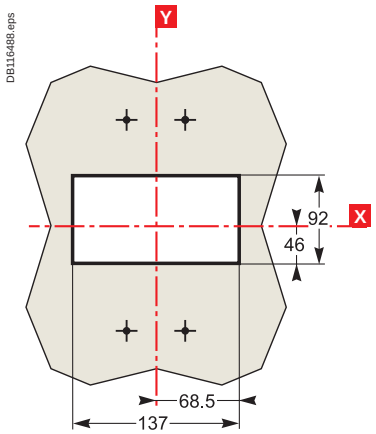

4P

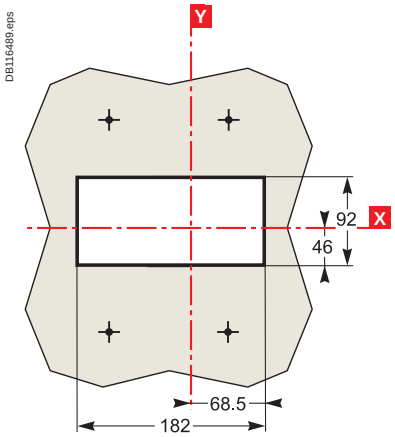

Dimensions
EasyPact 100 accessories

Terminal shields

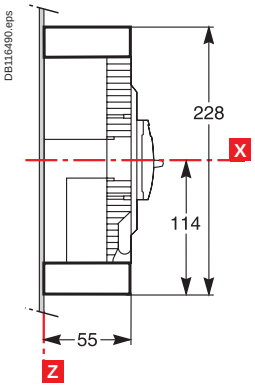

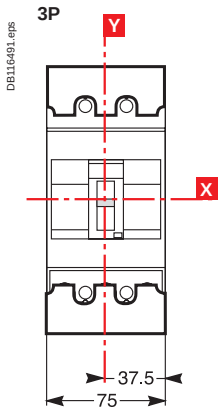

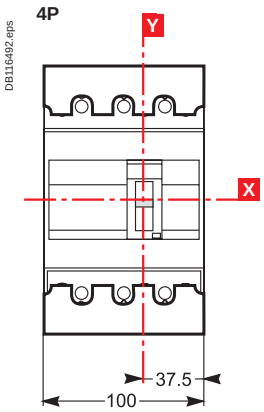

Phase barriers

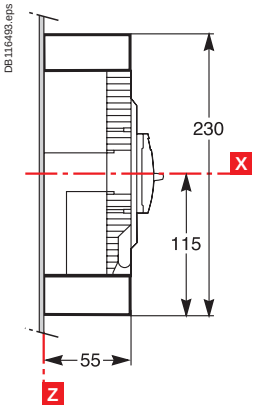

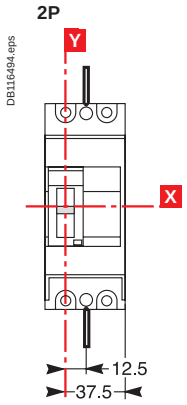

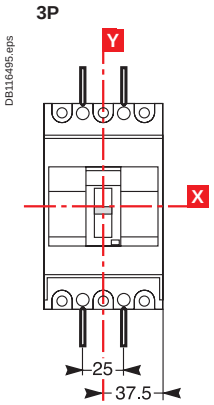

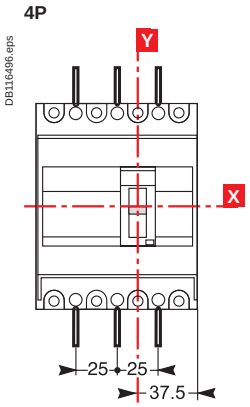

Direct rotary handle

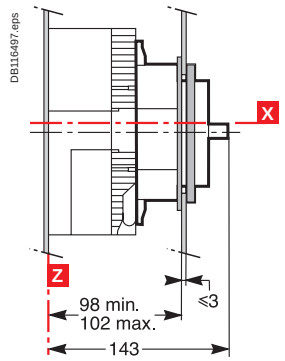

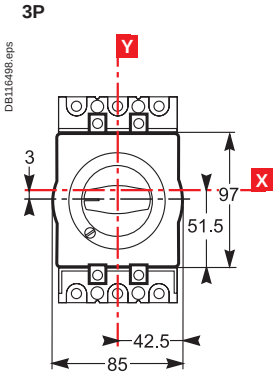

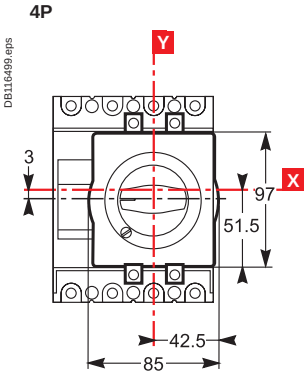

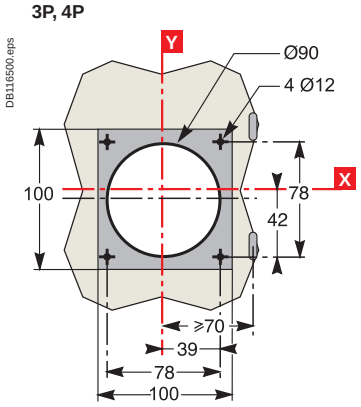

Extended rotary handle

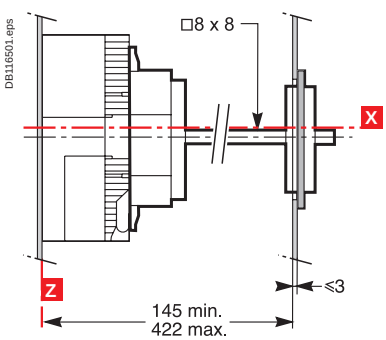

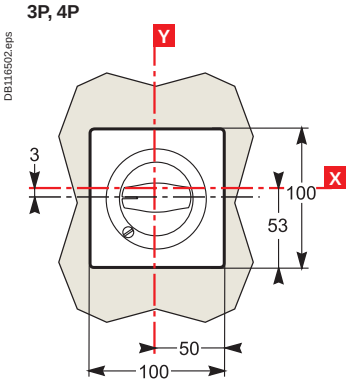

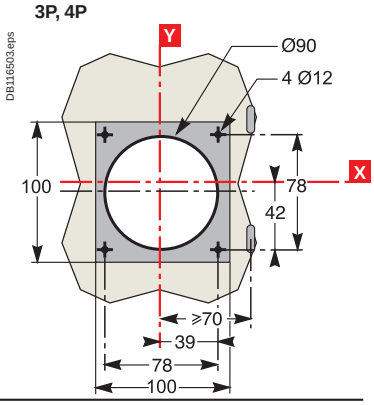

Terminal shields

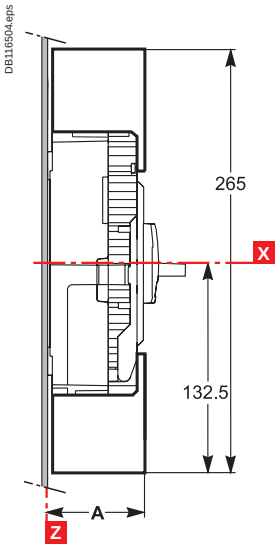

3P, 4P

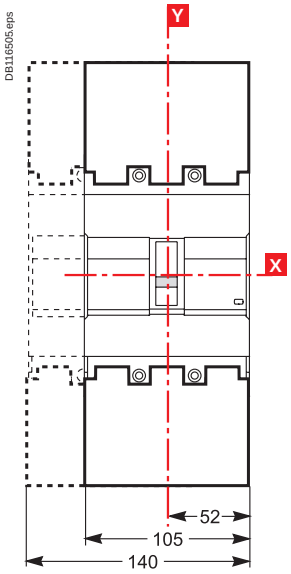

Phase barriers

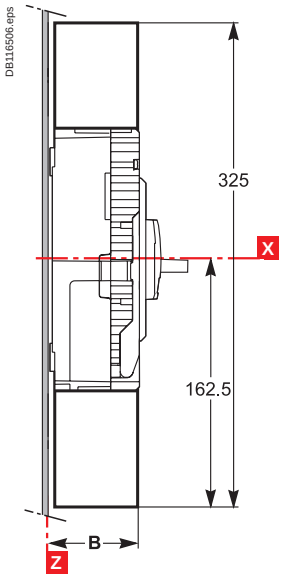

3P, 4P

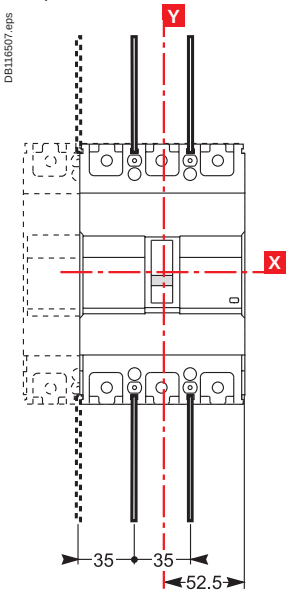

Direct rotary handle

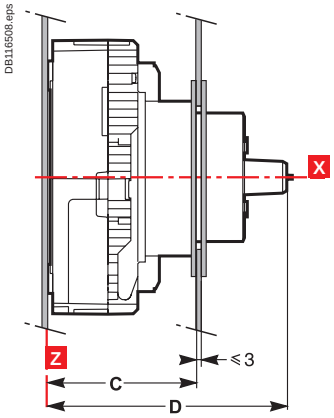

3P

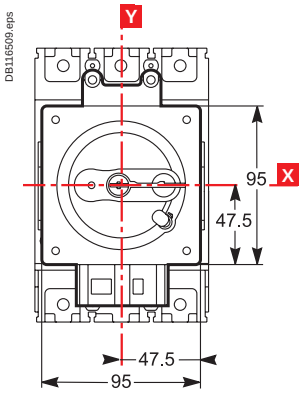

4P

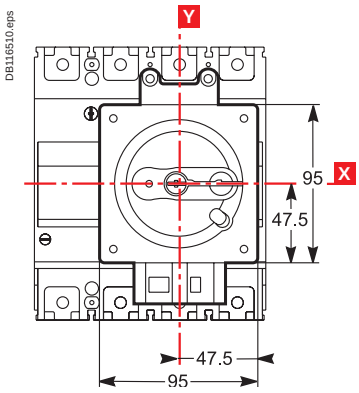

3P, 4P

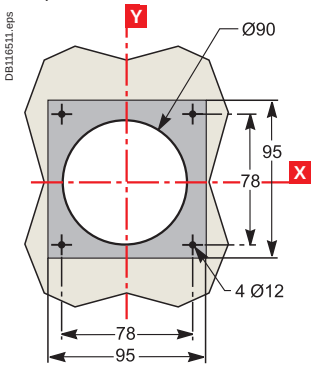

Extended rotary handle

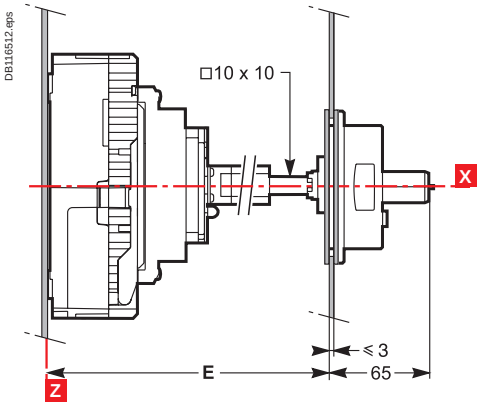

3P, 4P

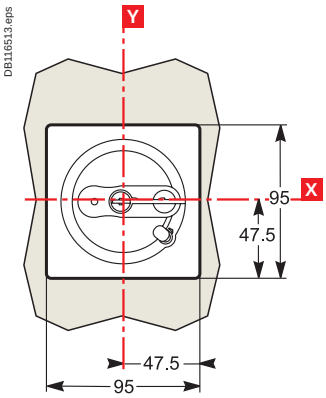

3P, 4P

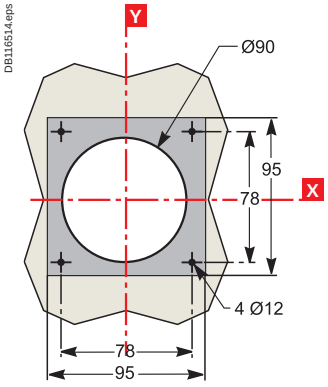

Dimensions (mm)

	A	B	C	D	E
EZC 2/3P	58.5	55	93 to 97	145	137 to 414
EZC 4P	66.5	63	101 to 105	153	145 to 422
EZCV 3P/4P					

Dimensions
EasyPact 400 accessories

Terminal shields

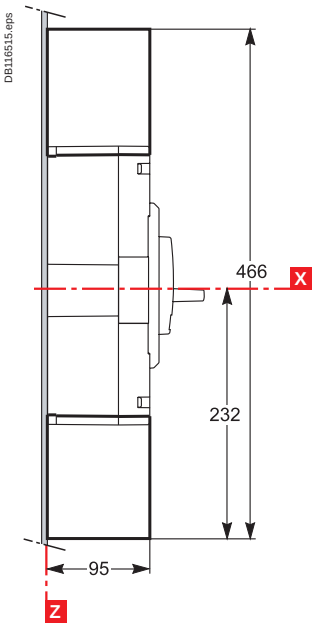

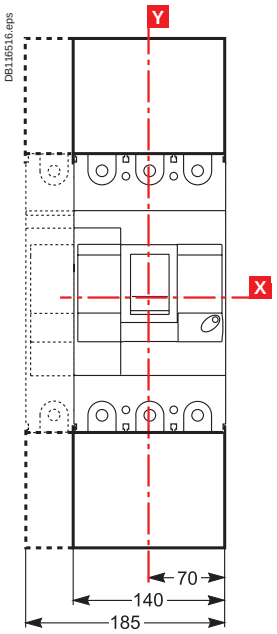

Phase barriers

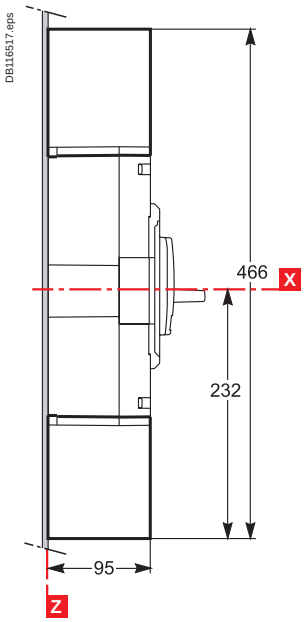

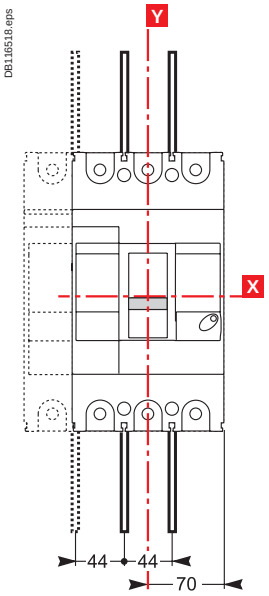

Direct rotary handle

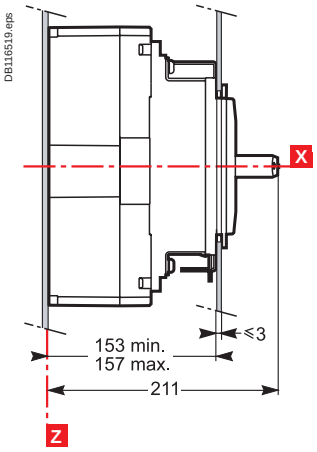

3P

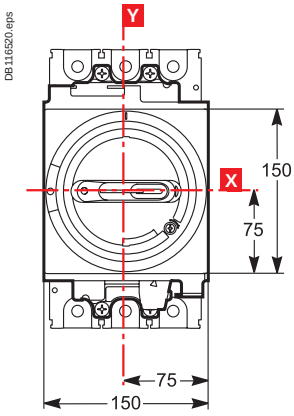

4P

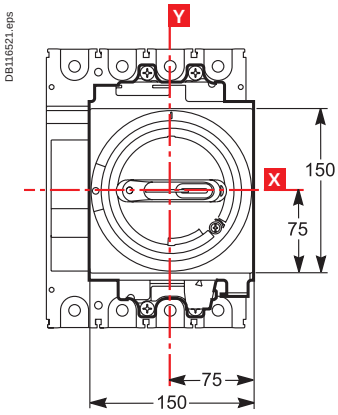

3P, 4P

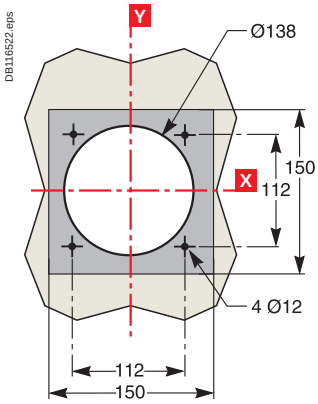

Extended rotary handle

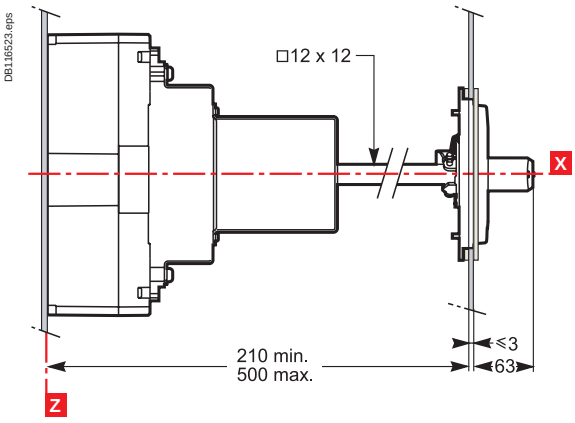

3P, 4P

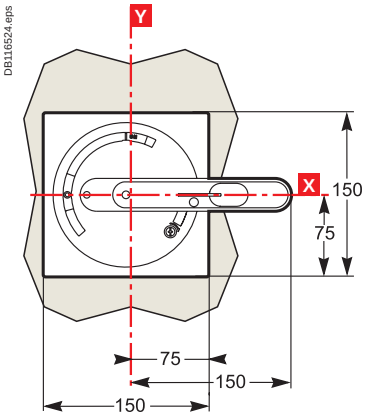

3P, 4P

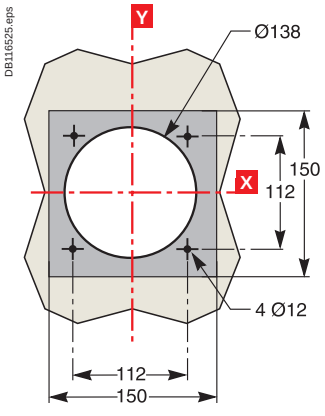

Safety clearances and minimum distances

When installing a circuit breaker, minimum distances (safety clearances) must be maintained between the device and panels, bars and other protection devices installed nearby. These distances, which depend on the ultimate breaking capacity, are defined by tests carried out in accordance with standard IEC 60947-2.

If installation conformity is not checked by type tests, it is also necessary to:
- use insulated bars for circuit-breaker connections
- block off the busbars using insulating screens.

For EasyPact breaker, terminal shields, inter-phase barriers or an insulation isolator are recommended and may be mandatory depending on the utilisation voltage and the type of installation.

Minimal distance between two adjacent circuit breakers

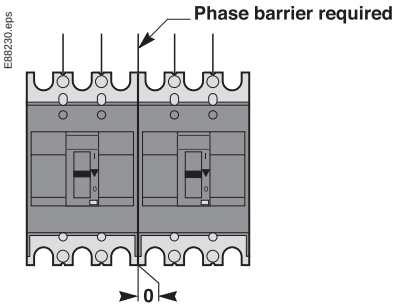

Minimal distance between the circuit breaker and top, bottom or side panels

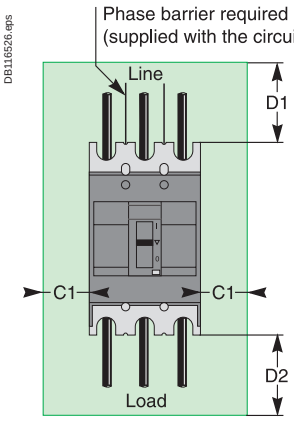

Minimal distance between the circuit breaker and front or rear panels

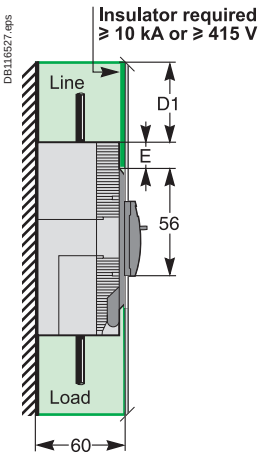

Dimensions (mm)	Bare or painted sheet metal:					
		insulated bars		bare busbar under voltage		
EasyPact circuit breaker	C1	D1	D2	D1	D2	E
EZC100B/F/N	40	45	45	75	45	40
EZC100H	40	60	45	75	45	40
EZC250F/N-EZCV250N	50	60	45	140	45	42.5
EZC250H-EZCV250H	50	80	45	140	45	42.5
EZC400N	50	120	100	250	100	40
EZC400H	80	140	100	250	100	40

The mandatory distances when installing EasyPact circuit breakers are calculated from the device case, not taking into account the terminal shields or the phase barriers.

Safety clearances and minimum distances

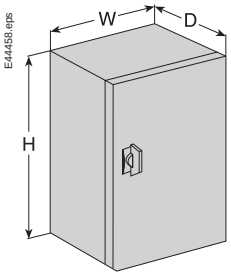

Installation in an enclosure.

Installation in an enclosure

EasyPact circuit breakers can be installed in a metal enclosure together with other devices (contactors, motor-protection circuit breakers, LEDs, etc.).

Minimum enclosure dimensions (3P)

Circuit breakers	Height (mm)	Depth (mm) (1)	Width (mm)
EZC100B/F/N	200	90	155
EZC100H	215	90	155
EZC250F/N-EZCV250N	270	90	205
EZC250H-EZCV250H	290	90	205
EZC400N	480	160	240
EZC400H	500	160	300

(1) With front door.

Ambient temperature

EasyPact devices are equipped with fixed thermal-magnetic trip units.
■ EasyPact has been particularly designed to hold 100 % In at 50 °C without tripping in normal condition (except for earth-leakage circuit breakers).
■ EasyPact circuit breakers may be used between -25 °C and +70 °C.
■ EasyPact circuit breakers should be put into service under normal ambient operating temperature conditions. Exceptionally, the circuit breaker may be put into service when the ambient temperature is between -35 °C and -25 °C.
■ the permissible storage-temperature range for EasyPact circuit breakers in the original packing is -35 °C to +85 °C.

To determine tripping times using time/current curves, use Ir values corresponding to the thermal setting on the device, corrected as indicated in the tables below.

Rated current (A)	25 °C	40 °C	45 °C	50 °C	55 °C	60 °C	65 °C	70 °C
EZC100								
15	17.0	15.7	15.3	15.0	14.7	14.6	14.2	13.8
16	18.1	16.7	16.3	16.0	15.7	15.6	15.1	14.7
20	21.8	20.4	20.2	20.0	19.7	19.2	18.9	18.5
25	26.9	25.7	25.3	25.0	24.7	24.5	24.3	24.0
30	34.5	31.4	30.7	30.0	29.4	29.1	28.5	28.0
32	36.8	33.5	32.7	32.0	31.4	31.0	30.4	29.9
40	42.8	40.9	40.4	40.0	39.5	38.0	37.6	37.1
45	48.8	46.9	45.9	45.0	44.4	43.3	42.6	41.9
50	54.2	52.1	51.0	50.0	49.3	48.1	47.3	46.6
60	64.4	61.8	60.9	60.0	59.0	57.5	56.6	55.7
63	67.6	64.9	63.9	63.0	62.0	60.4	59.4	58.5
75	78.6	76.8	75.9	75.0	73.5	70.4	69.8	69.1
80	84.4	82.2	81.1	80.0	78.6	77.3	76.7	76.1
100	109	103	101	100	99	94	94	93
EZC250								
63	77	69	66	63	60	56	53	49
80	93	86	83	80	77	74	71	68
100	115	106	103	100	96	93	89	85
125	148	135	130	125	120	114	109	103
150	174	160	155	150	145	139	134	128
160	186	171	166	160	154	148	142	136
175	207	188	182	175	168	161	153	145
200	236	215	208	200	192	184	175	166
225	268	244	235	225	215	205	194	182
250	297	270	260	250	239	228	215	203
EZCV250								
63	72	63	60	56	53	49	44	39
80	89	80	77	73	70	66	62	58
100	113	100	95	91	86	80	74	68
125	140	125	120	114	108	102	95	88
150	163	150	145	141	136	131	125	120
160	177	160	154	148	141	135	127	120
175	194	175	168	161	154	146	138	126
200	223	200	192	183	175	165	155	144
225	245	225	218	211	203	196	180	162
250	277	250	240	230	220	209	198	180
EZC400								
250	293	268	260	250	240	228	218	208
300	351	321	312	300	288	273	261	249
320	374	342	333	320	307	291	278	266
350	410	375	364	350	336	319	305	291
400	468	428	416	400	384	364	348	332

Tripping curves

EasyPact 100 TM trip units

15-16 A

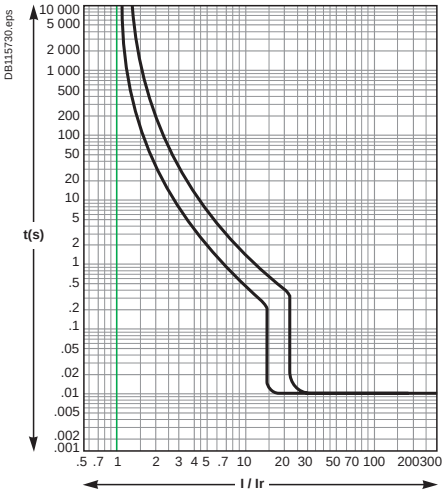

20 A

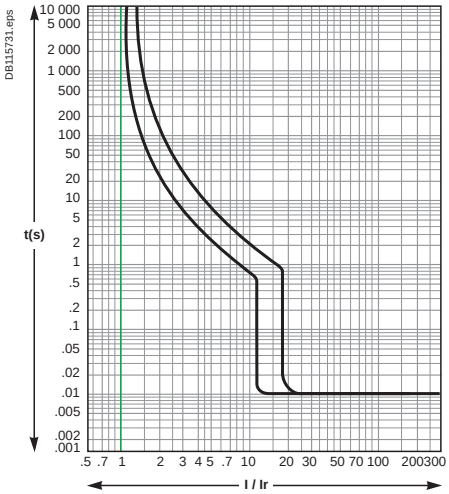

25 A

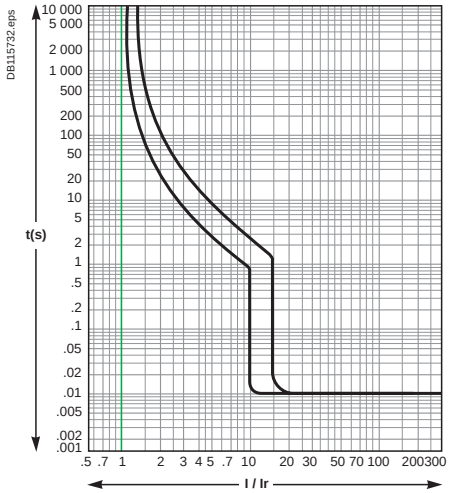

30-32 A

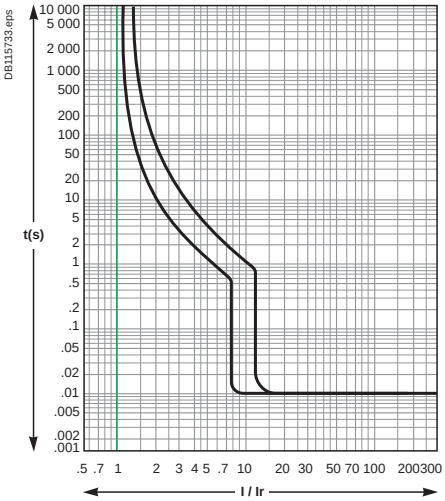

40 A

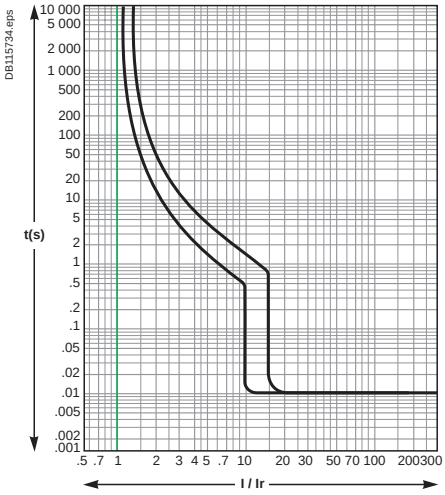

45-50 A

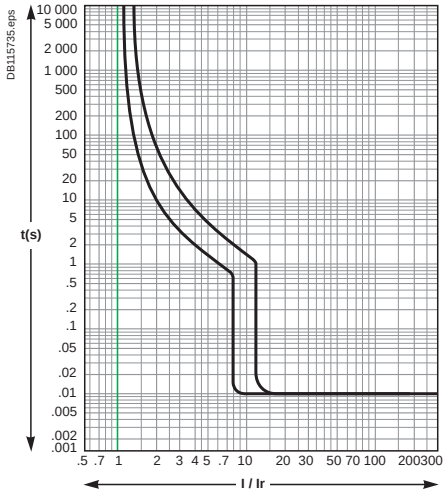

60-63 A

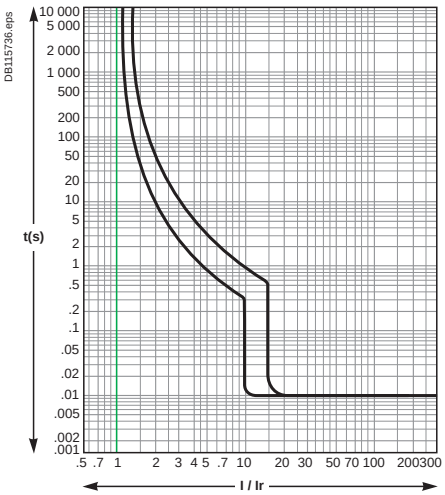

75 A

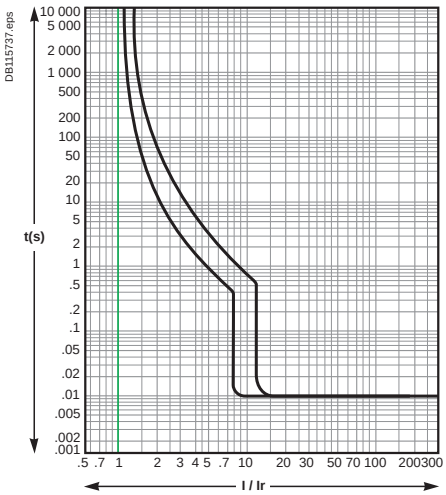

80 A

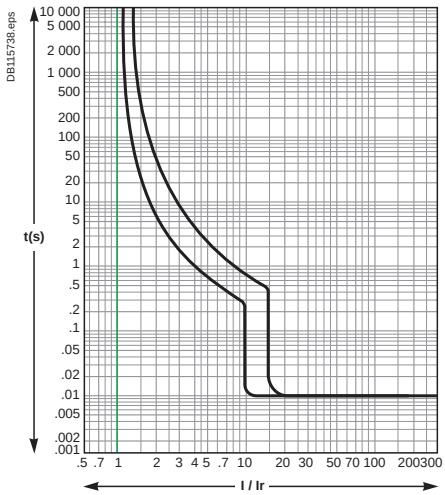

EasyPact 100 TM trip units (cont.)

100 A

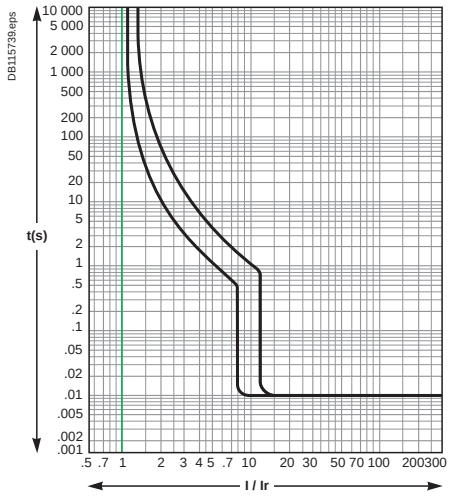

EasyPact 250 TM trip units

63-80-100-125 A

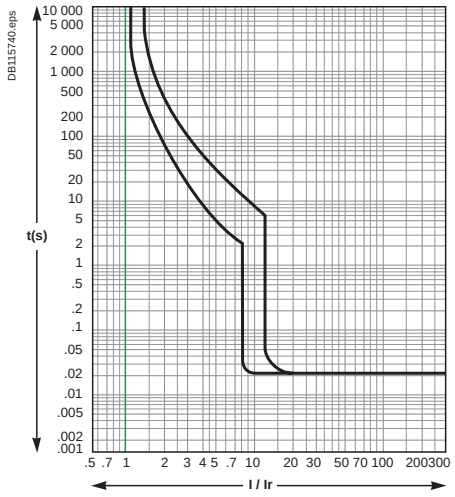

150-160-175-200 A

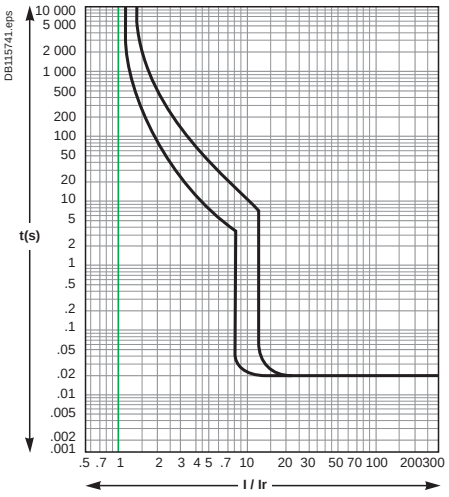

225-250 A

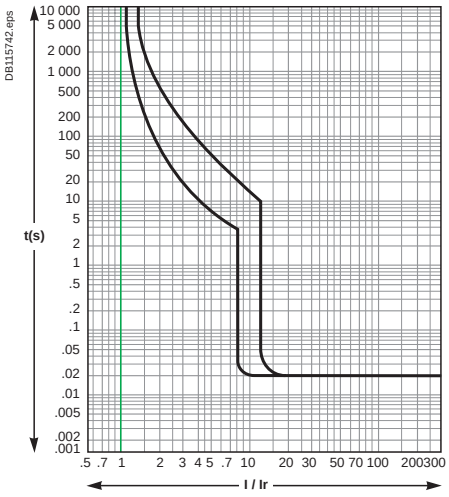

EasyPact 400 TM trip units

250-300-320-350-400 A

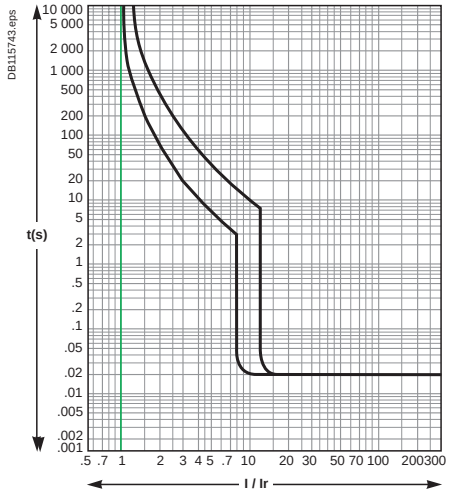

Current-limiting curves

The limiting capacity of a circuit breaker is its aptitude to limit short-circuit currents.

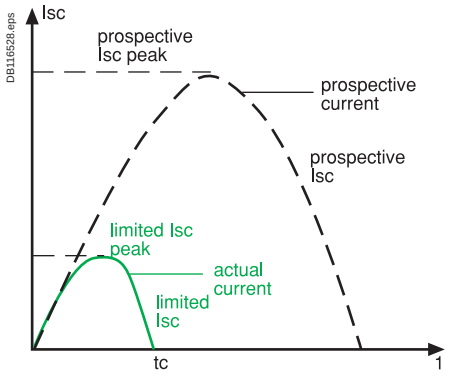

The exceptional limiting capacity of the EasyPact range greatly reduces the forces created by fault currents in devices.
The result is a major increase in breaking performance.

The Ics value, defined by IEC standard 60947-2, is guaranteed by tests comprising the following operations:
- ■ break three times consecutively a fault current equal from 25% to 100% of Icu
- ■ check that the device continues to function normally:
- □ it conducts the rated current without abnormal temperature rises
- □ protection functions perform within the limits specified by the standard
- □ suitability for isolation is not impaired.

Longer service life of electrical installations

Current-limiting circuit breakers greatly reduce the negative effects of short-circuits on installations.

Thermal effects
Less temperature rise in conductors, therefore longer service life for cables.

Mechanical effects
Reduced electrodynamic forces, therefore less risk of electrical contacts or busbars being deformed or broken.

Electromagnetic effects
Less disturbances for measuring devices located near electrical circuits.

Economy by means of cascading

Cascading is a technique directly derived from current limiting. Circuit breakers with breaking capacities less than the prospective short-circuit current may be installed downstream of a limiting circuit breaker. The breaking capacity is reinforced by the limiting capacity of the upstream device.
It follows that substantial savings can be made on downstream equipment and enclosures.

Current-limiting curves

The current-limiting capacity of a circuit breaker is expressed by two curves which are a function of the prospective short-circuit current (the current which would flow if no protection devices were installed):
- ■ the actual peak current (limited current),
- ■ thermal stress (A^2s), i.e. the energy dissipated by the short-circuit in a conductor with a resistance of 1 Ω.

Current limiting curves 380/415 V AC

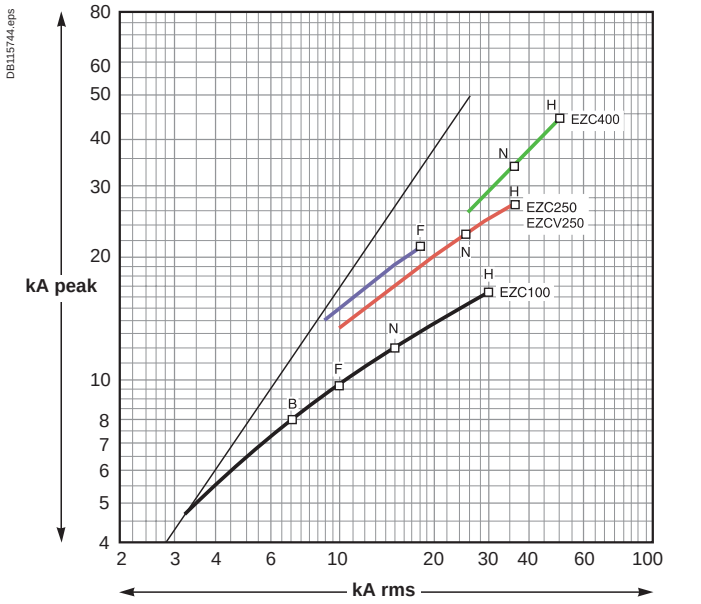

Thermal-stress curves 380/415 V AC

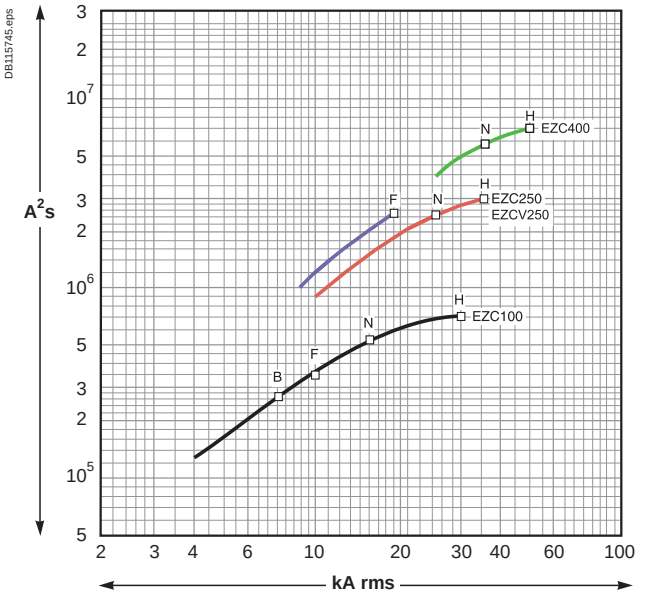

Cascading

What is cascading?

Cascading is the use of the current limiting capacity of circuit breakers at a given point to permit installation of lower-rated and therefore lower-cost circuit breakers downstream.
The upstream compact circuit breakers acts as a barrier against short-circuit currents. In this way, downstream circuit breakers with lower breaking capacities than the prospective short-circuit (at their point of installation) operate under their normal breaking conditions.
Since the current is limited throughout the circuit controlled by the limiting circuit breaker, cascading applies to all switchgear downstream. It is not restricted to two consecutive devices.

General use of cascading

With cascading, the devices can be installed in different switchboards. Thus, in general, cascading refers to any combination of circuit breakers where a circuit breaker with a breaking capacity less than the prospective Isc at its point of installation can be used. Of course, the breaking capacity of the upstream circuit breaker must be greater than or equal to the prospective short-circuit current at its point of installation.
The combination of two circuit breakers in cascading configuration is covered by the IEC 60947-2.

Coordination between circuit breakers

The use of a protective device possessing a breaking capacity less than the prospective short-circuit current at its installation point is permitted as long as another device is installed upstream with at least the necessary breaking capacity. In this case, the characteristics of the two devices must be coordinated in such a way that the energy let through by the upstream device is not more than that which can be withstood by the downstream device and the cables protected by these devices without damage.
Cascading can only be checked by laboratory tests and the possible combinations can be specified only by the circuit breaker manufacturer.

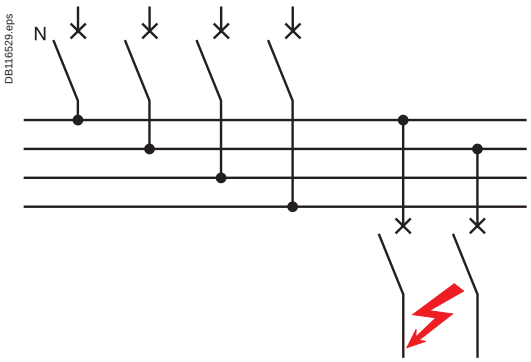

220/240 V network downstream from a 380/415 V network

For 1P + N or 2P circuit breakers connected between the phase and neutral on a 380/415 V network, with a TT or TNS neutral system, consult the 220/240 V cascading table to determine cascading possibilities between upstream and downstream circuit breakers.

Economy by means of cascading

Thanks to cascading, circuit breakers with breaking capacities less than the prospective short-circuit current may be installed downstream from a current limiting circuit breaker.
It follows that substantial savings can be made on downstream switchgear and enclosures.

Cascading tables

Schneider Electric cascading tables are:
- drawn up on the basis of calculations (comparison between the energy limited by the upstream device and the maximum permissible thermal stress for the downstream device)
- verified experimentally in accordance with IEC standard 60947-2.

For distribution systems with 220/240 V, 380/415 V and 440 V between phases, the tables of the following pages indicate cascading possibilities between upstream Compact/EasyPact and downstream Multi 9 and EasyPact circuit breakers.

Cascading tables

DB127584.eps

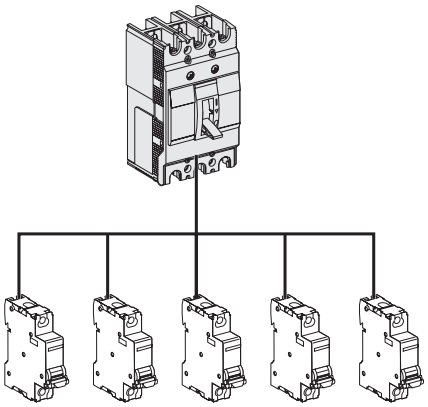

Network 220/240 V

Upstream		EZC100F	EZC100N	EZC100H
Breaking capacity kA rms		**25**	**25**	**100**
Downstream		**Enhanced breaking capacity**		
NC45	6	10	10	15
NC45N	10	15	15	25
NC45H	15	25	25	50
C60a	10	25	25	50
C60N	20	25	25	65
C60H	30	-	-	65
QO-E	10	25	25	50

Upstream		EZC250F	EZC250N EZCV250N	EZC250H EZCV250H	NS250H
Breaking capacity kA rms		**25**	**50**	**85**	**100**
Downstream		**Enhanced breaking capacity**			
EZC100B	10	-	-	15	20
EZC100F	25	-	30	30	50
EZC100N	25	-	30	36	50
EZC100H	100	-	-	-	-

Upstream		EZC400N	EZC400H	NB400 NB630	NS400N NS630N	NS400H NS630H
Breaking capacity kA rms		**85**	**100**	**85**	**85**	**100**
Downstream		**Enhanced breaking capacity**				
EZC100B	10	20	20	20	20	20
EZC100F	25	50	50	50	50	50
EZC100N	25	50	50	50	50	50
EZC100H	100	-	-	-	-	-
EZC250F	25	50	50	50	50	50
EZC/EZCV250N	50	85	85	85	85	85
EZC/EZCV250H	85	-	100	-	-	100

DB127585.eps

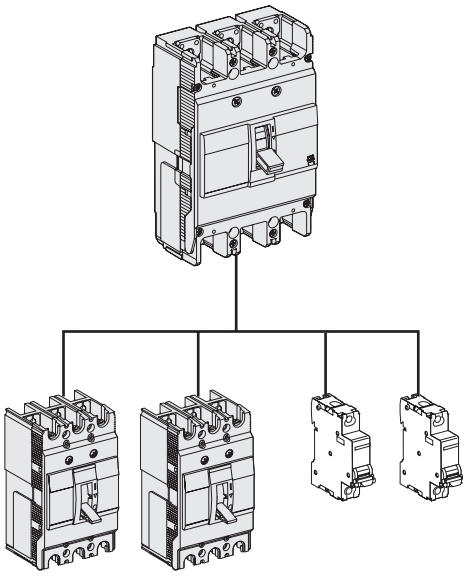

Network 380/415 V

Upstream		EZC100F	EZC100N	EZC100H
Breaking capacity kA rms		**10**	**15**	**30**
Downstream		**Enhanced breaking capacity**		
NC45	5	6	8	15
NC45N	8	10	10	15
NC45H	10	-	15	15
C60a	6	10	15	15
C60N	10	-	15	15
C60H	15	-	-	15
QO-E	5	10	15	15
GV2M	15	-	-	-

Upstream		EZC250F	EZC250N EZCV250N	EZC250H EZCV250H	NS250H
Breaking capacity kA rms		**18**	**25**	**36**	**70**
Downstream		**Enhanced breaking capacity**			
EZC100B	7.5	-	-	-	15
EZC100F	10	-	15	15	30
EZC100N	15	-	20	25	50
EZC100H	30	-	-	36	70

Upstream		EZC400N	EZC400H	NB400 NB630	NS400N NS630N	NS400H NS630H
Breaking capacity kA rms		**36**	**50**	**30**	**50**	**70**
Downstream		**Enhanced breaking capacity**				
EZC100B	7.5	-	-	-	-	-
EZC100F	10	-	-	-	-	-
EZC100N	15	20	20	20	20	30
EZC100H	30	36	36	-	45	50
EZC250F	18	20	20	20	20	20
EZC/EZCV250N	25	36	36	30	36	40
EZC/EZCV250H	36	-	-	-	45	50

Network 440 V

Upstream		EZC250F	EZC250N EZCV250N	EZC250H EZCV250H
Breaking capacity kA rms		**15**	**20**	**25**
Downstream		**Enhanced breaking capacity**		
EZC100B	5	-	-	-
EZC100F	7.5	-	-	-
EZC100N	10	-	15	15
EZC100H	20	-	-	-

Upstream		EZC400N	EZC400H	NB400 NB630	NS400N NS630N	NS400H NS630H
Breaking capacity kA rms		**20**	**40**	**30**	**42**	**65**
Downstream		**Enhanced breaking capacity**				
EZC100B	5	-	-	-	-	-
EZC100F	7.5	-	-	-	-	-
EZC100N	10	15	15	15	15	25
EZC100H	25	-	30	30	30	30
EZC250F	15	20	20	-	-	-
EZC/EZCV250N	20	-	25	25	25	30
EZC/EZCV250H	25	-	30	30	30	30

Motor protection

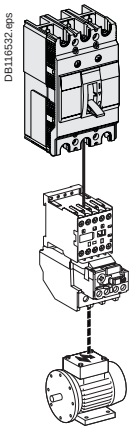

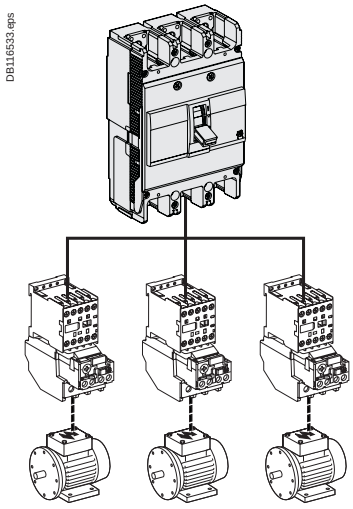

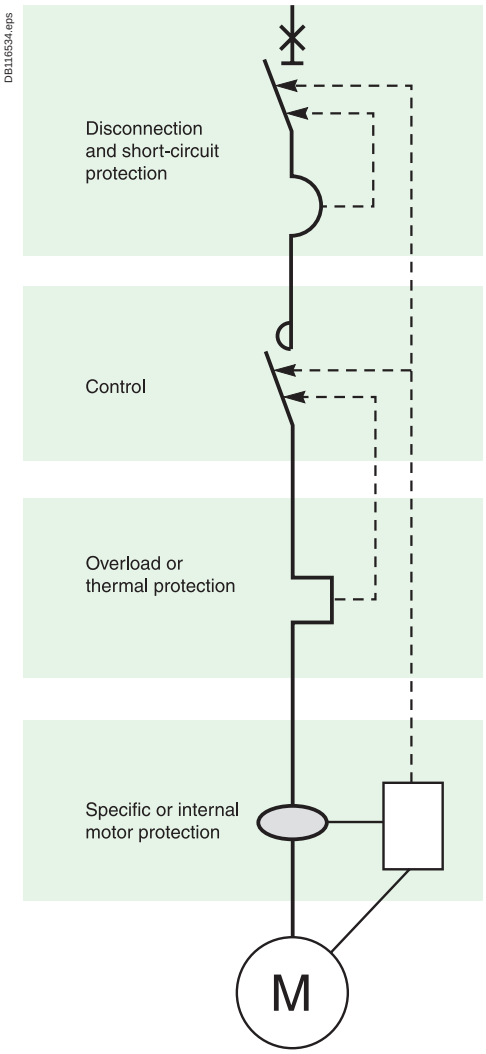

A circuit supplying a motor may include one, two, three or four switchgear or controlgear devices fulfilling one or more functions.

When a number of devices are used, they must be coordinated to ensure optimum operation of the motor.
Protection of a motor circuit involves a number of parameters that depend on:
- the application (type of machine driven, operating safety, starting frequency, etc.)
- the level of service continuity imposed by the load or the application
- the applicable standards to ensure protection of life and property.

The necessary electrical functions are of very different natures:
- short circuit protection
- overload protection dedicated for motor
- control (generally with high endurance levels)
- isolation.

Protection functions

Disconnection functions:
Isolate a motor circuit prior to maintenance operations.

Short-circuit protection:
Protect the starter and the cables against major overcurrents (> 10 In).
This type of protection is provided by a circuit breaker.

Control:
Start and stop the motor and, if applicable:
- gradual acceleration
- speed control.

Overload protection:
Protect the starter and the cables against minor overcurrents (< 10 In).
Thermal relays provide protection against this type of fault. They may be:
- integrated in the short-circuit protective device
- separate.

Additional specific protection:
- limitative fault protection (while the motor is running)
- preventive fault protection (monitoring of motor insulation with motor off).

Overloads (I < 10 In)
An overload may be caused by:
- an electrical problem, for instance on the mains (loss of a phase, voltage outside tolerances, etc.)
- a mechanical problem, for instance excessive torque due to abnormally high demands by the process or motor damage (bearing vibrations, etc.).

A further consequence of these two origins is excessively long starting.

Impedance short-circuit (10 < I < 50 In)
Deterioration of motor-winding insulation is the primary cause.

Short-circuit (I > 50 In)
This type of fault is relatively rare. A possible cause may be a connection error during maintenance.

Protection against insulation faults
This type of protection may be provided by:
- a residual current device (RCD)
- an insulation monitoring device (IMD).